Assembly Instructions

1

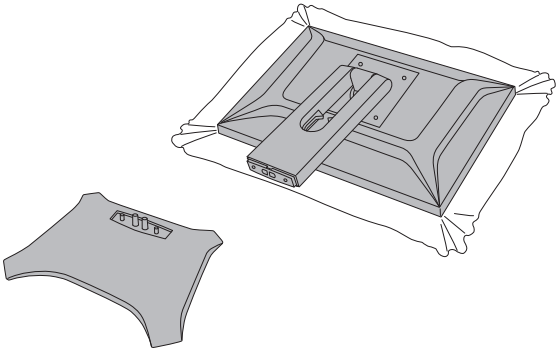

2

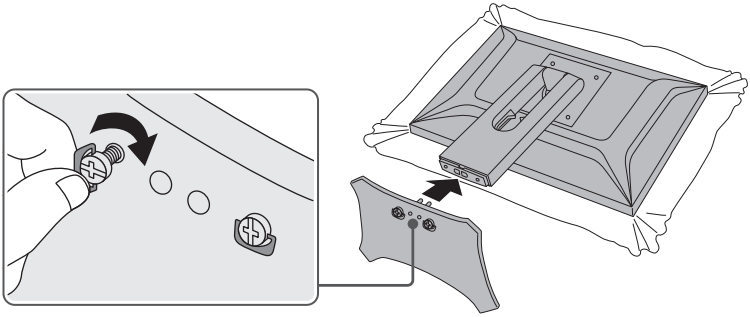

3

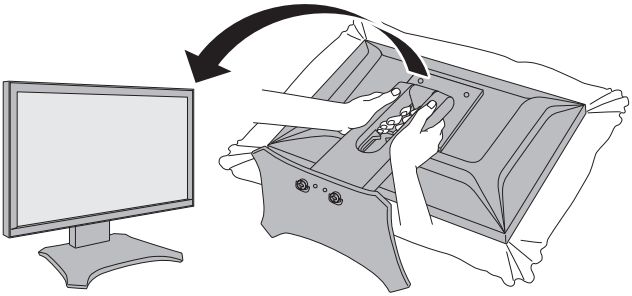

00N0N718A1

Copyright © 2026 EIZO Corporation. All rights reserved.

INSET-FDF2331W-IP