OUTLINE DIMENSIONS

MODEL	EV2795
UNIT	mm

EIZO Corporation

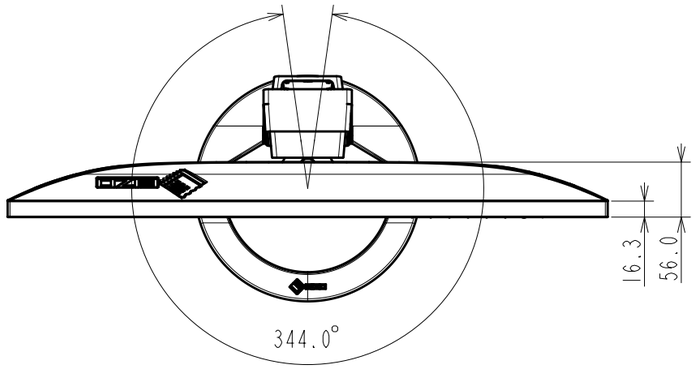

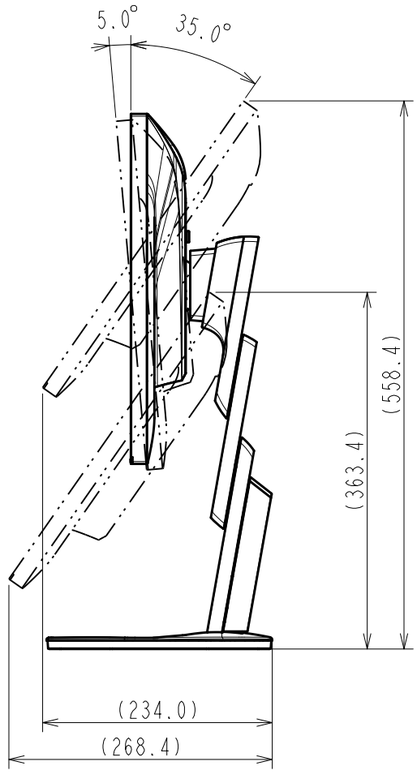

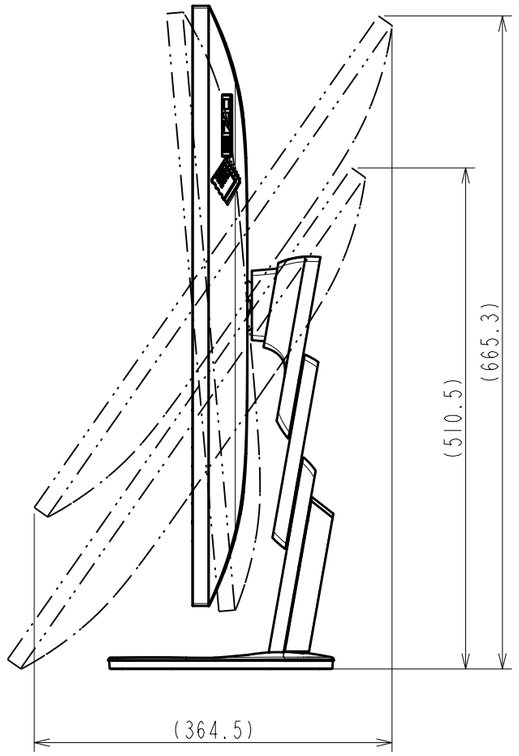

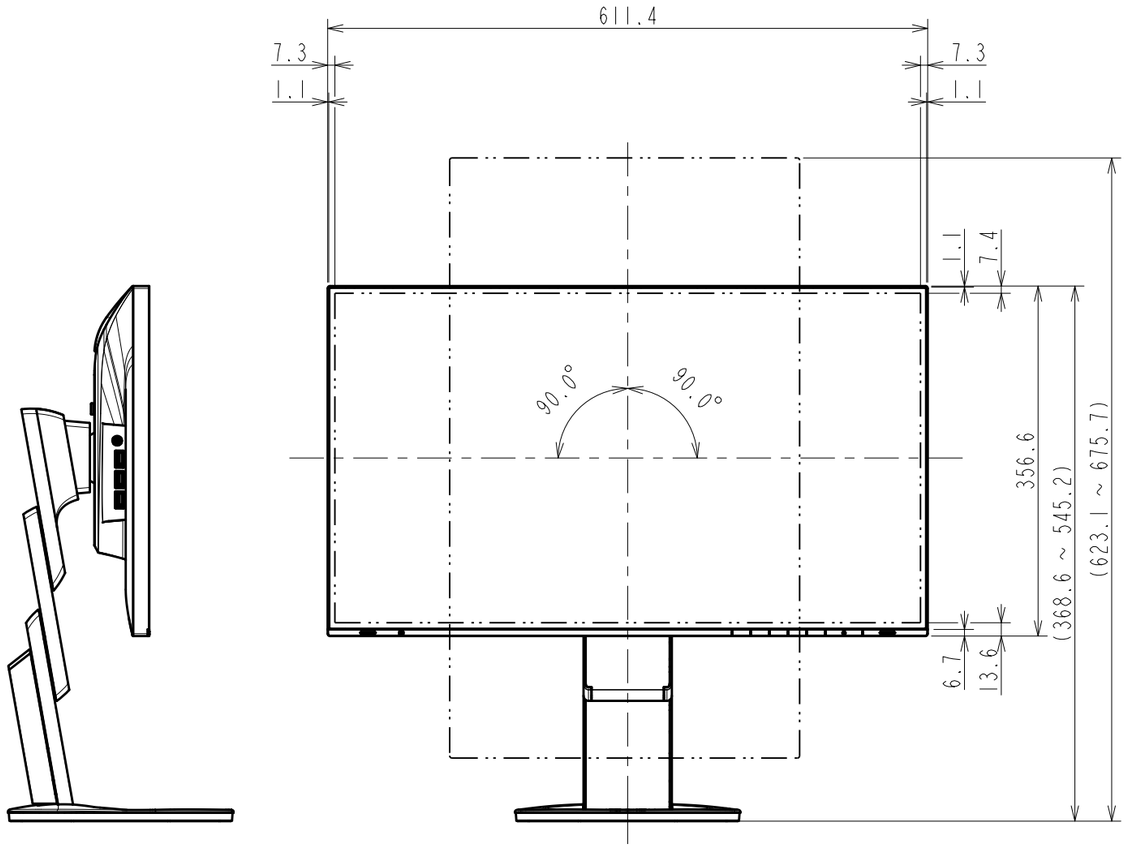

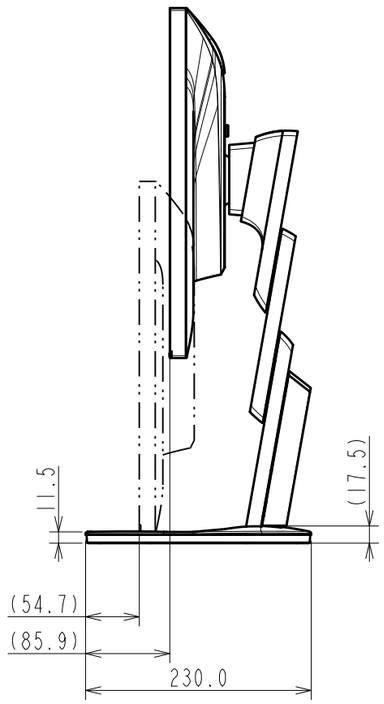

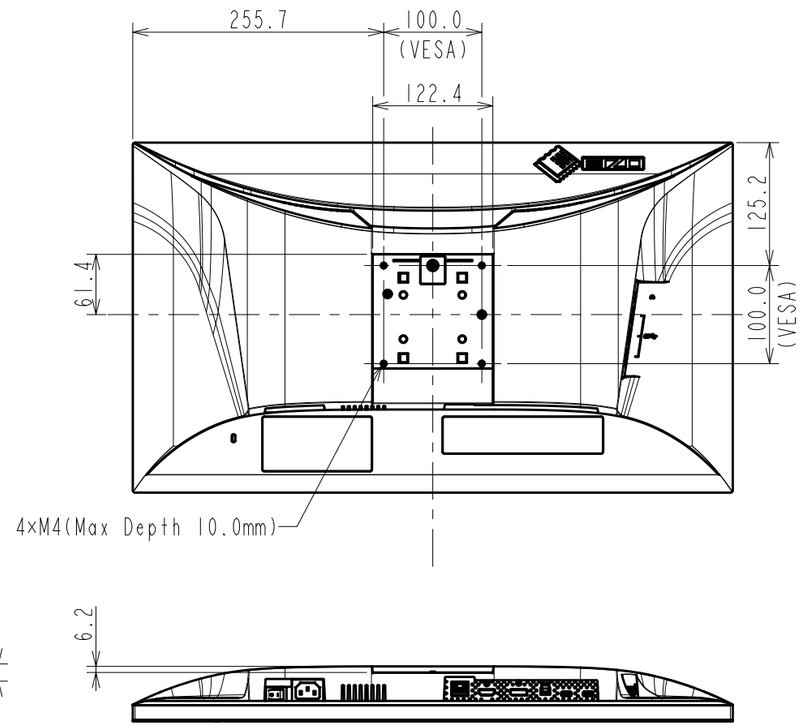

OUTLINE DIMENSIONS

MODEL	EV2795
UNIT	mm
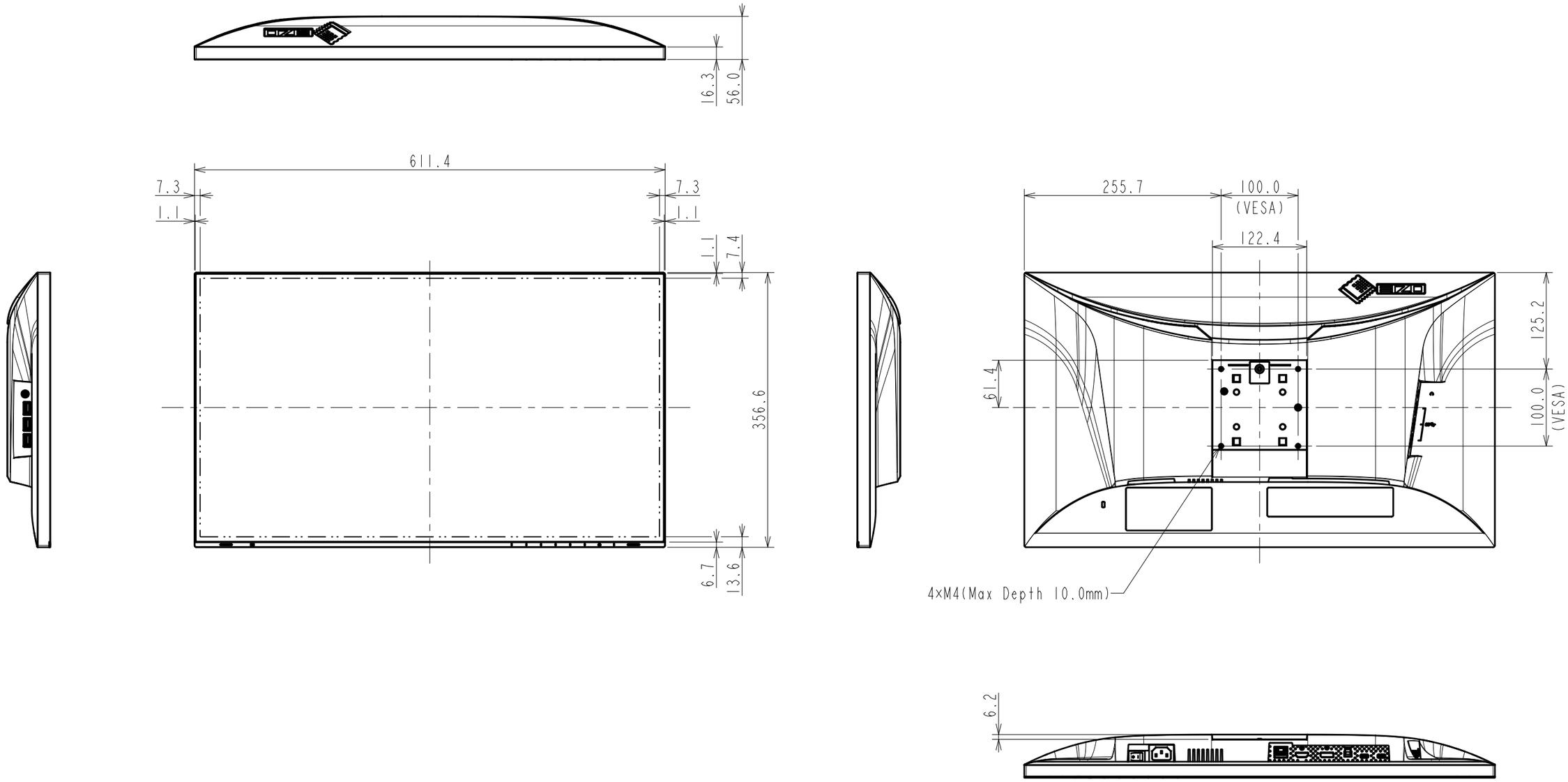
EIZO Corporation