User's Manual

RadiForce®
GX320-CL
GS320-CL
GS320-CLG

Monochrome LCD Monitor

Important

Please read this User's Manual carefully to familiarize yourself with safe and effective usage. Please retain this manual for future reference.

Wichtig

Lesen Sie die dieses Benutzerhandbuch aufmerksam durch, um sich mit der sicheren und effizienten Bedienung vertraut zu machen. Bewahren Sie dieses Handbuch zum späteren Nachschlagen auf.

Important

Veuillez lire attentivement ce Manuel d'utilisation afin de vous familiariser avec ce produit et de l'utiliser efficacement et en toute sécurité. Veuillez conserver ce manuel pour référence ultérieure.

重要

ご使用前には必ずこの取扱説明書をよくお読みになり、正しくお使いください。
この取扱説明書は大切に保管してください。

EIZO®

For U.S.A, Canada, etc. (rated 100-120 Vac) Only

FCC Declaration of Conformity

We, the Responsible Party	**EIZO NANAO TECHNOLOGIES INC.** **5710 Warland Drive, Cypress, CA 90630** **Phone: (562) 431-5011**
declare that the product	**Trade name: EIZO** **Model: RadiForce GX320/GS320**

is in conformity with Part 15 of the FCC Rules. Operation of this product is subject to the following two conditions: (1) this device may not cause harmful interference, and (2) this device must accept any interference received, including interference that may cause undesired operation.

This equipment has been tested and found to comply with the limits for a Class B digital device, pursuant to Part 15 of the FCC Rules. These limits are designed to provide reasonable protection against harmful interference in a residential installation. This equipment generates, uses, and can radiate radio frequency energy and, if not installed and used in accordance with the instructions, may cause harmful interference to radio communications. However, there is no guarantee that interference will not occur in a particular installation. If this equipment does cause harmful interference to radio or television reception, which can be determined by turning the equipment off and on, the user is encouraged to try to correct the interference by one or more of the following measures.

* Reorient or relocate the receiving antenna.
* Increase the separation between the equipment and receiver.
* Connect the equipment into an outlet on a circuit different from that to which the receiver is connected.
* Consult the dealer or an experienced radio/TV technician for help.

Changes or modifications not expressly approved by the party responsible for compliance could void the user's authority to operate the equipment.

Note

Use the attached specified cable below or EIZO signal cable with this monitor so as to keep interference within the limits of a Class B digital device.

- AC Cord
- Shielded Signal Cable (enclosed)

Canadian Notice

This Class B digital apparatus complies with Canadian ICES-003.
Cet appareil numérique de le classe B est comforme à la norme NMB-003 du Canada.

User's Manual

RadiForce®
GX320-CL
GS320-CL
GS320-CLG

Monochrome LCD Monitor

It shall be assured that the final system is in compliance to IEC60601-1-1 requirements.

SAFETY SYMBOLS

This manual uses the safety symbols below. They denote critical information. Please read them carefully.

WARNING

Failure to abide by the information in a WARNING may result in serious injury and can be life threatening.

CAUTION

Failure to abide by the information in a CAUTION may result in moderate injury and/or property or product damage.

Indicates a prohibited action.

Indicates to ground for safety.

- Power supplied equipment can emit electromagnetic waves, that could influence, limit or result in malfunction of the monitor. Install the equipment in a controlled environment, where such effects are avoided.
- This is a monitor intended for use in a medical image system. It does not support the display of mammography images for diagnosis.
- This product has been adjusted specifically for use in the region to which it was originally shipped. If operated outside this region, the product may not perform as stated in the specifications.

No part of this manual may be reproduced, stored in a retrieval system, or transmitted, in any form or by any means, electronic, mechanical, or otherwise, without the prior written permission of EIZO NANAO CORPORATION.
EIZO NANAO CORPORATION is under no obligation to hold any submitted material or information confidential unless prior arrangements are made pursuant to EIZO NANAO CORPORATION's receipt of said information. Although every effort has been made to ensure that this manual provides up-to-date information, please note that EIZO monitor specifications are subject to change without notice.

Apple, Mac, Macintosh, iMac, eMac, Mac OS, MacBook, PowerBook, ColorSync, QuickTime, and iBook are registered trademarks of Apple Inc.
VESA is a registered trademark or a trademark of the Video Electronics Standards Association in the United States and other countries.
Windows, Windows Vista, Windows Media, SQL Server, and Xbox 360 are registered trademarks of Microsoft Corporation in the United States and other countries.
EIZO, the EIZO Logo, ColorEdge, DuraVision, FlexScan, FORIS, RadiForce, RadiCS, RadiNET, Raptor, and ScreenManager are registered trademarks of EIZO NANAO CORPORATION in Japan and other countries.
All other company and product names are trademarks or registered trademarks of their respective owners.

TABLE OF CONTENTS

⚠PRECAUTIONS 4

1. INTRODUCTION 9
   1-1. Features 9
   1-2. Package Contents 9
   1-3. Controls & Connectors 10

2. INSTALLATION 12
   2-1. Before Connecting 12
   2-2. Cable Connection 12
   2-3. Environmental Settings 15

3. ADJUSTMET & SETTINGS 17
   3-1. How to use the ScreenManager 17
   3-2. ScreenManager menu 18
   3-3. CAL Switch Function 22
   3-4. Adjustment Lock Function 23

4. BRIGHTNESS ADJUSTMENT & IMAGE ADJUSTMENT 24
   4-1. Brightness Adjustment 24
   4-2. Image Adjustments 24

5. MAKING USE OF USB (Universal Serial Bus) 25

6. HOW TO ATTACH THE OPTIONAL ARM 27

7. TROUBLESHOOTING 28

8. CLEANING 31

9. SPECIFICATIONS 32

10. GLOSSARY 36

⚠PRECAUTIONS

IMPORTANT!

- This product has been adjusted specifically for use in the region to which it was originally shipped. If operated outside the region to which it was originally shipped, the product may not perform as stated in the specifications.
- To ensure personal safety and proper maintenance, please read this section and the caution statements on the unit (refer to the figure below).

[Location of the Caution Statements]

[Symbols on the unit]

Symbol	Location	This symbol indicates
○	Rear	Main power switch Press to turn the monitor's main power off.
|	Rear	Main power switch Press to turn the monitor's main power on.
⏻	Front Control panel	Power switch Touch to turn the monitor's power on or off.
~	Rear Name Plate	Alternating current
⚡	Rear	Alerting electrical hazard
⚠	Rear	Caution Refer to SAFETY SYMBOLS section in this manual.

⚠ WARNING

If the unit begins to emit smoke, smells like something is burning, or makes strange noises, disconnect all power connections immediately and contact your dealer for advice.

Attempting to use a malfunctioning unit may result in fire, electric shock, or equipment damage.

Do not open the cabinet or modify the unit.

Opening the cabinet or modifying the unit may result in fire, electric shock, or burn.

Refer all servicing to qualified service personnel.

Do not attempt to service this product yourself as opening or removing covers may result in fire, electric shock, or equipment damage.

Keep small objects or liquids away from the unit.

Small objects accidentally falling through the ventilation slots into the cabinet or spillage into the cabinet may result in fire, electric shock, or equipment damage.

If an object or liquid falls/spills into the cabinet, unplug the unit immediately. Have the unit checked by a qualified service engineer before using it again.

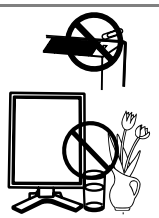

Place the unit at the strong and stable place.

A unit placed on an inadequate surface may fall and result in injury or equipment damage.

If the unit falls, disconnect the power immediately and ask your dealer for advice. Do not continue using a damaged unit. Using a damaged unit may result in fire or electric shock.

Use the unit in an appropriate location.

Not doing so may result in fire, electric shock, or equipment damage.

* Do not place outdoors.
* Do not place in the transportation system (ship, aircraft, trains, automobiles, etc.)
* Do not place in a dusty or humid environment.
* Do not place in a location where water is splashed on the screen (bathroom, kitchen, etc.)
* Do not place near heat generating devices or a humidifier.
* Do not place in a location where the product is subject to direct sunlight.
* Do not place in an inflammable gas environment.

To avoid danger of suffocation, keep the plastic packing bags away from babies and children.

Use the enclosed power cord and connect to the standard power outlet of your country.

Be sure to remain within the rated voltage of the power cord.

Not doing so may result in fire or electric shock.

Power supply: 100-120/200-240 VAC, 50/60 Hz

⚠ WARNING

To disconnect the power cord, grasp the plug firmly and pull.

Tugging on the cord may damage and result in fire or electric shock.

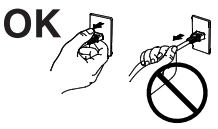

The equipment must be connected to a grounded main outlet.

Not doing so may result in fire or electric shock.

Use the correct voltage.

* The unit is designed for use with a specific voltage only. Connection to another voltage than specified in this User's Manual may cause fire, electric shock, or equipment damage.
  Power supply: 100-120/200-240 VAC, 50/60 Hz
* Do not overload your power circuit, as this may result in fire or electric shock.

Handle the power cord with care.

* Do not place the cord underneath the unit or other heavy objects.
* Do not pull on or tie the cord.

If the power cord becomes damaged, stop using it. Use of a damaged cord may result in fire or electric shock.

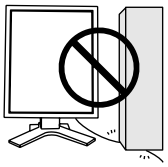

For the electrical safety, do not connect or disconnect the power cord in the presence of patients.

Never touch the plug and power cord if it begins to thunder.

Touching them may result in electric shock.

When attaching an arm stand, please refer to the user's manual of the arm stand and install the unit securely.

Not doing so may cause the unit to come unattached, which may result in injury or equipment damage. Before installation, make sure that desks, walls, and others an arm stand is fixed on have adequate mechanical strength. When the unit is dropped, please ask your dealer for advice. Do not continue using a damaged unit. Using a damaged unit may result in fire or electric shock. When reattaching the tilt stand, please use the same screws and tighten them securely.

Do not touch a damaged LCD panel directly with bare hands.

The liquid crystal which leaks from the panel is poisonous if it enters the eyes or mouth. If any part of the skin or body comes in direct contact with the panel, please wash thoroughly. If some physical symptoms result, please consult your doctor.

Fluorescent backlight lamps contain mercury (the products that have LED backlight lamps contain no mercury), dispose according to local, state or federal laws.

Exposure to elemental mercury can result in effects on the nervous system, including tremor, memory loss, and headache.

⚠ CAUTION

Handle with care when carrying the unit.

Disconnect the power cord and cables when moving the unit. Moving the unit with the cord attached is dangerous. It may result in injury.

Carry or place the unit according to the correct specified methods.

* When handing the unit, grip the bottom of the unit firmly with both hands ensuring the panel faces outward before lifting.

Dropping the unit may result in injury or equipment damage.

Do not block the ventilation slots on the cabinet.

* Do not place any objects on the ventilation slots.
* Do not install the unit in a closed space.
* Do not use the unit laid down or upside down.

Blocking the ventilation slots prevents proper airflow and may result in fire, electric shock, or equipment damage.

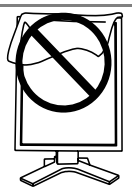

Do not touch the plug with wet hands.

Doing so may result in electrical shock.

Use an easily accessible power outlet.

This will ensure that you can disconnect the power quickly in case of a problem.

Periodically clean the area around the plug.

Dust, water, or oil on the plug may result in fire.

Unplug the unit before cleaning it.

Cleaning the unit while it is plugged into a power outlet may result in electric shock.

If you plan to leave the unit unused for an extended period, disconnect the power cord from the wall socket after turning off the power switch for the safety and the power conservation.

This product is only suitable for a patient environment, but not for contact with a patient.

Notice for this monitor

This product is suited to displaying medical images of such modalities as MRI and CT. It does not support the display of mammography images for diagnosis.

This product has been adjusted specifically for use in the region to which it was originally shipped. If the product is used outside the region, it may not operate as specified in the specifications.

This product may not be covered by warranty for uses other than those described in this manual.

The specifications noted in this manual are only applicable when the following are used:
· Power cords provided with the product
· Signal cables specified by us

Only use optional products manufactured or specified by us with this product.

As it takes about 30 minutes for the performance of electrical parts to stabilize, adjust the monitor 30 minutes or more after the monitor power has been turned on.

Monitors should be set to a lower brightness to reduce changes in luminosity caused by long-term use and maintain a stable display.

When the screen image is changed after displaying the same image for extended periods of time, an afterimage may appear. Use the screen saver or power save function to avoid displaying the same image for extended periods of time.

Periodic cleaning is recommended to keep the monitor looking new and to prolong its operation lifetime (refer to “8.CLEANING” (p. 31)).

The screen may have defective pixels or a small number of light dots on the screen. This is due to the characteristics of the panel itself, and is not a malfunction of the product.

The backlight of the LCD panel has a fixed lifetime. When the screen becomes dark or begins to flicker, please contact your dealer.

Do not press on the panel or edge of the frame strongly, as this may result in display malfunctions, such as interference patterns, etc. If pressure is continually applied to the panel, it may deteriorate or damage your panel. (If the pressure marks remain on the panel, leave the monitor with a black or white screen. The symptom may disappear.)

Do not scratch or press on the panel with any sharp objects, as this may result in damage to the panel. Do not attempt to brush with tissues as this may scratch the panel.

When the monitor is cold and brought into a room or the room temperature goes up quickly, dew condensation may occur on the interior and exterior surfaces of the monitor. In that case, do not turn the monitor on. Instead wait until the dew condensation disappears, otherwise it may cause some damage to the monitor.

To use the monitor comfortably

An excessively dark or bright screen may affect your eyes. Adjust the brightness of the monitor according to the environmental conditions.

Staring at the monitor for a long time tires your eyes. Take a 10-minute rest every hour.

1. INTRODUCTION

Thank you for choosing an EIZO Monochrome Monitor.

1-1. Features

- DVI (p. 36) Digital input compliant for TMDS (p. 36)
- [Horizontal scanning frequency] 31 - 100 kHz
  [Vertical scanning frequency] 29.5 ~ 71.5 Hz (VGA text: 69 - 71 Hz)
  [Frame synchronous mode] 59 - 61 Hz supported
  [Resolution] 3M pixels (Portrait: 1536 × 2048 dots (H × V))
- CAL Switch function for selecting an optimal calibration mode (p. 22)
- Selectable screen compliant with DICOM Part 14 (p. 36)
- USB (Universal Serial Bus) hub support (p. 25)
- Utility software "ScreenManager Pro for Medical", which enables control of the monitor from a Windows PC with a mouse or keyboard (refer to the EIZO LCD Utility Disk).
- Monitor stand adjustable for different heights
- Slim bezel
- Built-in Swing Sensor [*1] (GX320-CL only)

[*1] This sensor is used when calibrating the monitor with the exclusive software RadiNET Pro / RadiCS (see "Options" p. 34).

Storing or using the sensor at a temperature of under 30°C and a humidity of under 70% is recommended, or it may affect the accuracy of the measurement. Avoid storing or using the sensor where it may be exposed to direct sunlight.

1-2. Package Contents

Please contact your local dealer for assistance if any of the listed items are missing or damaged.

- LCD Monitor[*1]
- Power Cord
- Signal Cable (FD-C39)
- EIZO USB Cable (MD-C93)
- EIZO LCD Utility Disk
- User's Manual
- LIMITED WARRANTY
- Cleaning Kit "ScreenCleaner" (GX320-CL / GS320-CLG only)

[*1] The landscape position is the default monitor orientation. For the portrait position, rotate the monitor ninety degrees counter-clockwise before installing it.

NOTE

- Please retain the packing materials for future transport of the monitor.

1-3. Controls & Connectors

Front

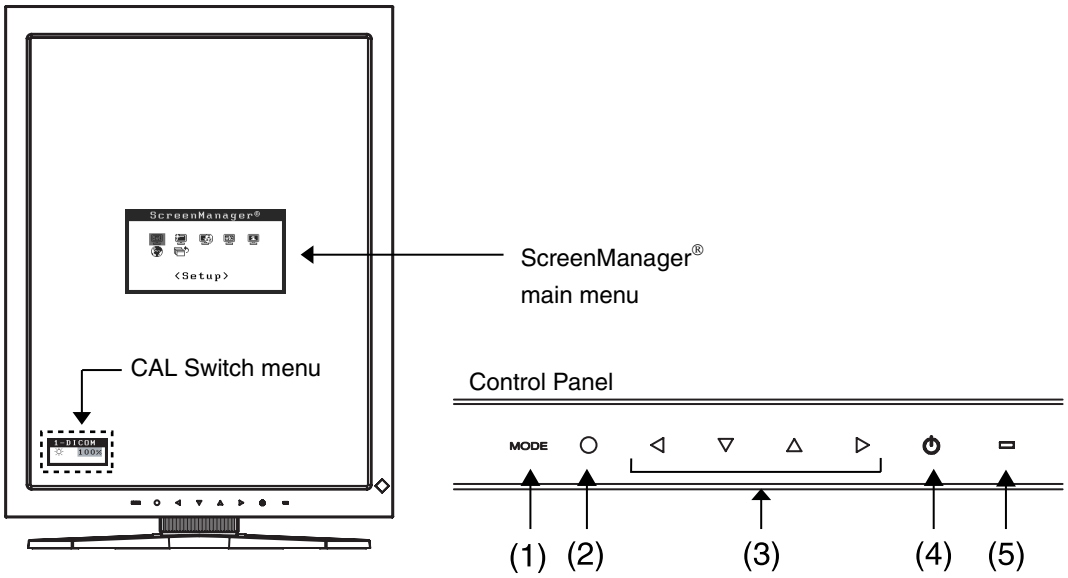

(1) MODE Mode Switch

(2) ○ Enter Switch

(3) ◁▽△▷ Directing Switches (Left, Down, Up, Right) [*1]

(4) ⏻ Power Switch

(5) ▭ Power Indicator[*2]

Green	Operational
Orange	Power saving
Flashing orange slowly	Power off (Main power is on)
Off	Main Power off

[*1] When the monitor is oriented in the landscape position, these switches can be changed to Up, Left, Right, and Down (p. 15).

[*2] To disable the power indicator while the monitor is operational, see p. 21. For power indicator status when using the “Off Timer,” see p.21.

Side / Rear

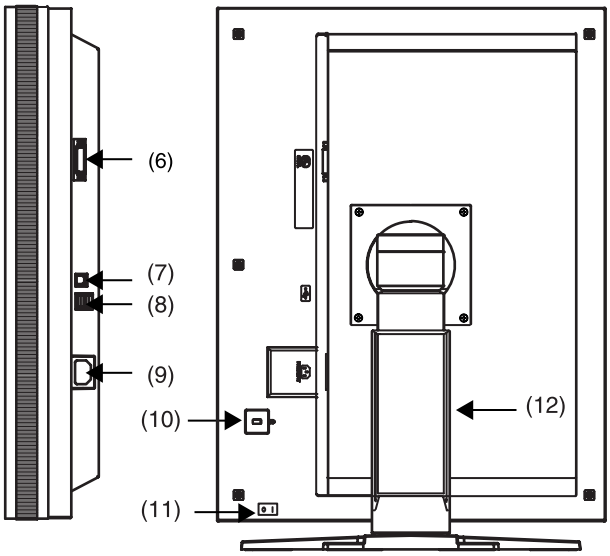

(6) DVI-D connector
(7) USB upstream port (x 1)
(8) USB downstream ports (x 2)
(9) Power connector
(10) Security lock slot[*3]
(11) Main Power Switch
(12) Monitor stand with adjustable height (detachable) [*4]

[*3] Allows for connection of a security cable. This lock supports Kensington's MicroSaver security system.

[*4] The LCD monitor can be oriented in the landscape position. (It can rotate clockwise ninety degrees.)
By removing the monitor stand, the LCD monitor can be used with the optional arm stand (p. 27).

2. INSTALLATION

2-1. Before Connecting

Before connecting your monitor to the PC, change the display screen settings resolution (p. 36) and frequency in accordance with the charts below.

NOTE

- When your computer and monitor support VESA DDC, the appropriate resolution and the refresh rate are set just by plugging your display into the computer without any manual settings.

Resolution		Frequency	Dot Clock	Packed Pixel		Standard	
				Portrait	Landscape	Portrait	Landscape
720×400	VGA TEXT	70 Hz	165 MHz (Max.)	√	√	√	√
640×480	VGA	60 Hz		√	√	√	√
800×600	VESA	60 Hz		–	–	√	√
1536×1024	3M Packed Pixel	60 Hz		√	–	–	–
1024×1536	3M Packed Pixel	60 Hz		–	√	–	–
2048×1536	VESA CVT Reduced	49 Hz		–	–	–	√
1536×2048	VESA CVT Reduced	46 Hz		–	–	√	–
2048×1536	VESA CVT	30 Hz		–	–	–	√
1536×2048	VESA CVT	30 Hz		–	–	√	–

"√": Supported

2-2. Cable Connection

NOTE

- Be sure that the power switches of both the PC and the monitor are OFF.
- Refer to the PC user's manual when connecting the monitor.
- Before making a connection for non monochrome signal only specifications, the monitor must be configured.
  For more information, refer to "2-3. Environmental Settings" (p. 15).

1. Rotate the monitor ninety degrees counter-clockwise into the portrait position.

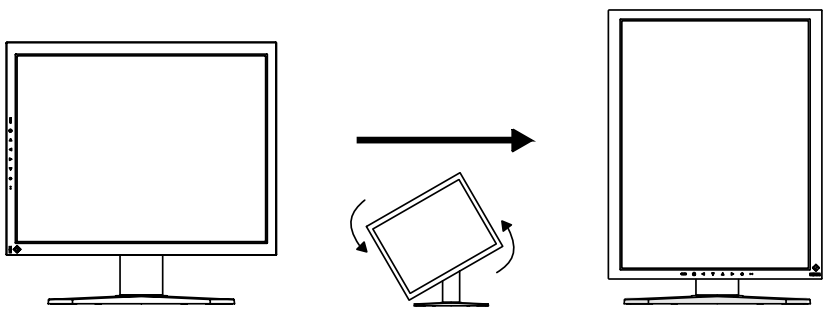

2. Connect the signal cable to the DVI-D input connector on the rear of the monitor and to the video output connector on the PC.

After connecting, secure the cable connectors with the attached screw-in fasteners.

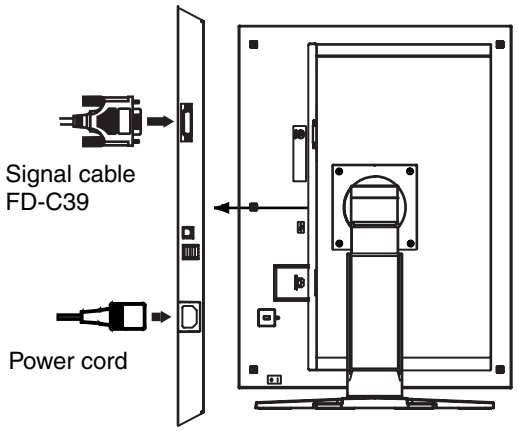

Signal Cable	Connector on PC	PC
Signal cable (FD-C39)	Video Output Connector / DVI-D	Exclusive graphics board (p. 34)

3. Connect the power cord to the power connector on the rear of the monitor.

4. Thread the power cord and signal cable through the cable holder on the rear of the monitor stand.

NOTE

- When threading the cables through the cable holder, lead them to the cable entrance side and pinch the projection to open the cable entrance.
- It is recommended that some slack be left in the cables to allow for smooth adjustment of the monitor stand and easy rotation between the portrait and landscape positions.

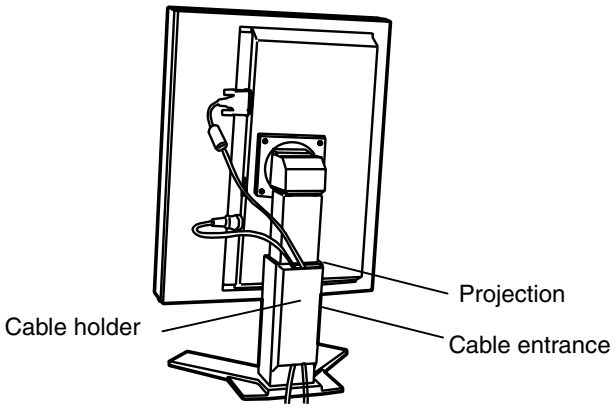

5. Connect the other end of the power cord to a power outlet.

⚠ WARNING

Use the enclosed power cord and connect to the standard power outlet of your country.

Be sure to remain within the rated voltage of the power cord.

Not doing so may result in fire or electric shock.

The equipment must be connected to a grounded main outlet.

Not doing so may result in fire or electric shock.

6. Turn on the monitor's power by touching the power switch.

The monitor's power indicator will light up green.

7. Turn on the PC's power.

The image will appear.

If an image does not appear, refer to "7. TROUBLESHOOTING" (p. 28) for additional advice.

When finished, turn off the PC and the monitor.

NOTE

- Adjust the brightness of the screen depending on the brightness of your environment.
- Be sure to take adequate rests. A 10-minute rest period each hour is suggested.

8. When using the software "ScreenManager Pro for Medical," connect the monitor to a USB compliant Windows computer (or other USB hub) with a USB cable.

Refer to "5. MAKING USE OF USB (Universal Serial Bus)" (p. 25).

2-3. Environmental Settings

The monitor may need to be set in some environment. If you install it for the first time or change environment, set the monitor.

- Set the signal corresponding to make a connection for non monochrome signal only specifications.
- Set the monitor orientation

If the monitor is in portrait position and make a connection for monochrome signal only specifications, no setting is required.

NOTE

- Refer to the manual of the graphics board.
- These environment described below can be set regardless of whether or not the computer is running.

How to set

1. **Turn off the monitor power by touching the power switch on the control panel.**

2. **Touch the power switch while touching the mode switch on the control panel.**

3. **The <Signal Selection> menu appears. Select (or check) the signal with directing switches corresponding to the kind of graphics board or the image data to be displayed and touch the enter switch.**

Signal Selection Menu

4. **Next the <Orientation> menu appears. Select (or check) the orientation with directing switches according to your monitor orientation and touch the enter switch.**

Orientation Menu

Monitor Orientation	Display Example
Landscape Select this option when using the Landscape orientation.	
Portrait (SW) Select this option when using the Portrait orientation. Graphics board utility software is used to rotate the display image 90 degrees.	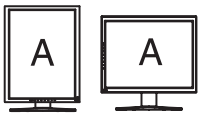
Portrait (HW) Select this option when using the Portrait orientation. The monitor function is used to rotate the display image 90 degrees.	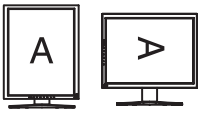

5. **Restart the computer if the settings have been changed.**

3. ADJUSTMET & SETTINGS

3-1. How to use the ScreenManager

Screen adjustments and settings can be performed with the ScreenManager (OSD) and switches of the monitor.

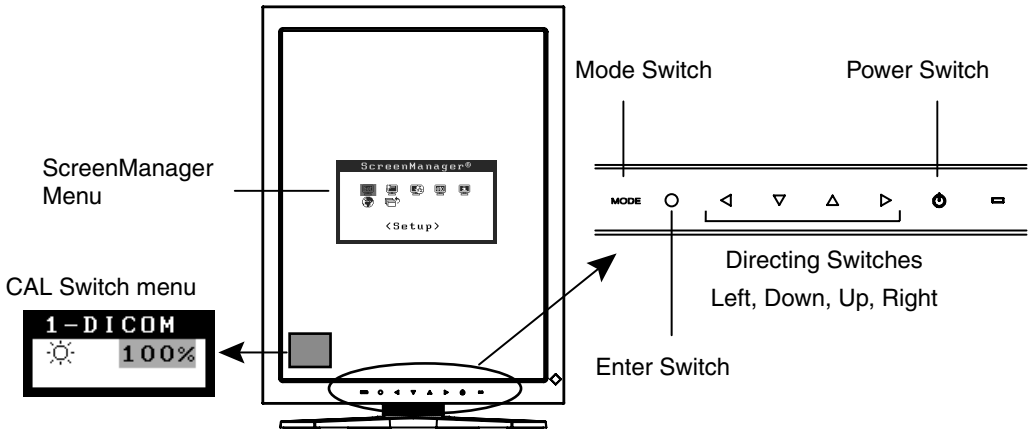

Adjustment	Startup	Description
ScreenManager menu	Enter Switch	3-2. ScreenManager menu (p.18)
CAL Switch menu	Mode Switch	3-3. CAL Switch Function (p.22)
Switches		
*Adjustment Lock	Enter Switch + Power Switch	3-4. Adjustment Lock Function (p.23)
*Signal Selection Orientation Selection	Mode Switch + Power Switch	2-3. Environmental Settings (p.15)

For information about each function, refer to each chapter described above.

NOTE

- The ScreenManager menu and CAL Switch menu cannot be displayed at the same time.

3-2. ScreenManager menu

Using ScreenManager menu controls the screen adjustment and settings. Refer to the "Explanation" column in the following table for each detailed functions.

Functions

The following table shows all the ScreenManager's adjustment and setting menus.

Main menu	Sub menu		Explanation
Setup	Mode Preset		Mode Preset Function <Setup>-<Mode Preset> (p. 20)
Mode	Brightness		See 4-1. Brightness Adjustment (p. 24)
	Reset		
PowerManager	DVI DMPM		Power Saving Function <PowerManager> (p. 20)
Others	Border Intensity		4-2. Image Adjustments (p. 24)
	Off Timer		Turn off the monitor after a specified time (p. 21).
	Menu Settings	Menu Position	Adjust the menu position
		Menu Off Timer	Adjust how long to display the menu. *1
	Power Indicator		Disable the green power indicator (p. 21).
	Reset		Restore the factory default settings (p. 34).
Information	Information		View the ScreenManager settings, model name, serial number, and usage time. *2
Language	English, German, French, Spanish, Italian, Swedish, Chinese (Simplified), Chinese (Traditional) and Japanese		Select the language of the ScreenManager menus.

*1 The display time of the CAL Switch menu can be adjusted.

*2 Due to factory inspection, the usage time may not be "0 hours" at time of shipping.

How to use the ScreenManager

ScreenManager menu

[Entering the ScreenManager]

Touch the enter switch.

[Making adjustments and settings]

(1) Select the desired submenu icon with the directing switches and touch the enter switch.

(2) Select the desired setting icon with the directing switches and touch the enter switch.

(3) Make any required adjustments with the directing switches and touch the enter switch.

[Exiting the ScreenManager]

(1) To return to the main menu, select the <Return> icon or touch the Down directing switch twice, followed by the enter switch.

(2) To exit the ScreenManager, select the <Exit> icon or touch the Down directing switch twice, followed by the enter switch.

NOTE

- Touching the enter switch twice quickly also exits the ScreenManager.

Mode Preset Function <Setup>-<Mode Preset>

When CAL Switch mode is selected, the computer can be forced to display only specified modes. Use this function when the display modes are restricted or when the display should not be changed needlessly.

[How to set]

(1) Select <Mode Preset> in the ScreenManager <Setup> menu.

(2) Set each mode to "On" or "Off".

NOTE

- You cannot disable all modes. Set one or more modes to "On".

[How to cancel]

(1) Select <Mode Preset> in the ScreenManager <Setup> menu.

(2) Set the mode that you wish to display to "On".

Power Saving Function <PowerManager>

The <PowerManager> menu in the ScreenManager enables to set the power saving.
This monitor complies with the "DVI DMPM" (p. 36).

NOTE

- Do your part to conserve energy, turn off the monitor when you are finished using it. Disconnecting the monitor from the power supply is recommended to save energy completely.
- Even if the monitor is in power-saving mode, USB compliant devices draw power when they are connected to the monitor's USB ports (both upstream and downstream). Therefore, the monitor's power consumption will change according to which devices are connected, even if the monitor is in power-saving mode.

[How to set]

(1) Set the PC's power saving settings.

(2) Select "DVI DMPM" in the <PowerManager> menu.

[Power saving system]

PC	Monitor	Power Indicator
On	Operation	Green
Power saving/ Off mode	Power saving	Orange

[Power Resumption Procedure]

Operate the mouse or keyboard to return to a normal screen.

Off Timer <Others>-<Off Timer>

The off timer function causes the monitor to turn off automatically after a predetermined amount of time has lapsed. This function was created to reduce the afterimages particular to LCD monitors, which appear when the screen is left on for long periods without use.

[How to set]

(1) Select <Off Timer> in the ScreenManager <Others> menu.

(2) Select "Enable" and touch the Right and Left directing switches to adjust the operating time (1 to 23 hours).

[Off timer system]

PC	Monitor	Power Indicator
Operating time (1H - 23H)	Operational	Green
Last 15 min. in operating time	Advance Notice [*1]	Flashing green
Operating time expired	Power off	Flashing orange slowly

[*1] By touching the power switch on the control panel during the Advance Notice period, the operating time can be reset to 90 minutes. Resetting can be performed an unlimited number of times.

[How to restore power]

Touch the power switch to return to a normal screen.

NOTE

- The off timer function works while the PowerManager is active, but there is no advance notice before the monitor's power is turned off.

Power Indicator Function <Others>-<Power Indicator >

Use the function to keep the power indicator without light while the monitor is operational. (The power indicator is set by default to light when the power is turned on.)

[How to set]

(1) Select <Power Indicator> in the ScreenManager <Others> menu.

(2) Select "Disable".

3-3. CAL Switch Function

The most suitable display mode is available by switching the mode switch on the control panel.

The <Brightness> settings can be adjusted on the CAL Switch menu.

CAL Switch Modes

Mode	Description
1-DICOM	Select this option to display images in the DICOM mode (see p. 36).
2-Native	Select this option to display images using the native characteristics of the monitor panel.
3-CAL	Used for monitor calibration

* All modes can be calibrated independently.
The mode name can also be changed using the calibration kit (see Optional, p. 34).

How to use the CAL Switch Function

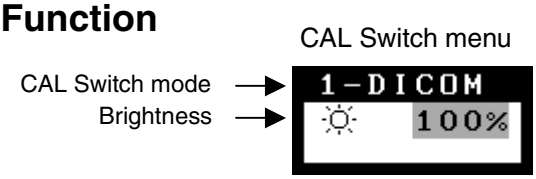

[Entering the CAL Switch menu]

Touch the mode switch.

[Selecting the CAL Switch mode]

Touch the mode switch while the CAL Switch menu is displayed.

Touching the mode switch allows you to select the following mode.

1-DICOM → 2-Navive → 3-CAL → 1-DICOM

[Making brightness adjustments in CAL Switch mode]

(1) Touch the mode switch.

(2) Adjust the brightness value with the Left and Right directing switches.

[Closing the CAL Switch menu]

Touch the enter switch.

NOTE

- The ScreenManager menu and CAL Switch menu cannot be displayed at the same time.
- When switching between modes, the monitor can be set to display only the specified modes, skipping any unnecessary modes. (see p.20 Mode Preset Function <Setup>-<Mode Preset>)

3-4. Adjustment Lock Function

Use the “Adjustment Lock” function to prevent any accidental changes.

Locked functions	• Display, adjustment, and setting of the ScreenManager • Brightness adjustments to the CAL Switch mode
Unlocked function	• Selection of the CAL Switch mode with the mode switch

[How to lock]

(1) Turn off the monitor power by touching the power switch.

(2) Touch the power switch while touching the enter switch.

[How to unlock]

(1) Turn off the monitor power by touching the power switch.

(2) Touch the power switch while touching the enter switch, and then turn on the monitor again. The adjustment lock is released.

NOTE

- The adjustment lock function may activate when calibration is performed with the calibration kit (see Optional, p. 34). The monitor can be unlocked using the same unlocking procedure described above.

4. BRIGHTNESS ADJUSTMENT & IMAGE ADJUSTMENT

4-1. Brightness Adjustment

The brightness of the entire screen can be set to a desired level.

[How to adjust]

(1) Select <Brightness> in the ScreenManager <Mode> menu.

(2) Make adjustments with the Left and Right directing switches.
The Left directing switch makes the screen darker, and the Right directing switch makes it brighter.

NOTE

- Selecting <Reset> in the <Mode> menu resets the brightness of the selected CAL Switch mode to the factory default setting.

4-2. Image Adjustments

When a low-resolution image is displayed, the brightness of the border area surrounding the image (i.e., the dark area where no image appears) can be adjusted.

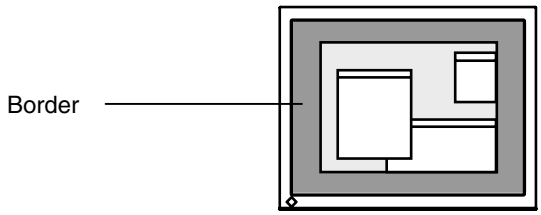

[How to adjust]

(1) Select <Border Intensity> in the ScreenManager <Others> menu.

(2) Make adjustments with the Left and Right directing switches. The Left directing switch makes the border darker, and the Right directing switch makes it brighter.

5. MAKING USE OF USB (Universal Serial Bus)

This monitor provides a hub which supports the USB standard. When connecting to a USB compliant PC or another hub, the monitor functions as a hub to which the USB compliant peripherals can be easily connected.

Required system environment

- PC equipped with USB ports or another USB hub connected to the USB compliant PC
- Windows 98/Me/2000/XP // Mac OS 8.5.1 or later
- EIZO USB Cable (MD-C93)

NOTE

- The USB hub function may not work properly depending on the PC, OS or peripherals. Please consult the manufacturer of each device about the USB support.
- When the monitor is not on, the peripherals connected to the downstream ports will not operate.
- Even if the monitor is in a power saving mode, the devices connected to the monitor's USB ports (both the upstream and the downstream) will function.

Connecting to the USB HUB

1. Connect the monitor to the PC with the signal cable (p.13) first, then turn on the PC.

2. Connect the upstream port of the monitor to the downstream port of the USB compliant PC or another hub by using the USB cable.

After connecting the USB cable, the USB function can be set up automatically.

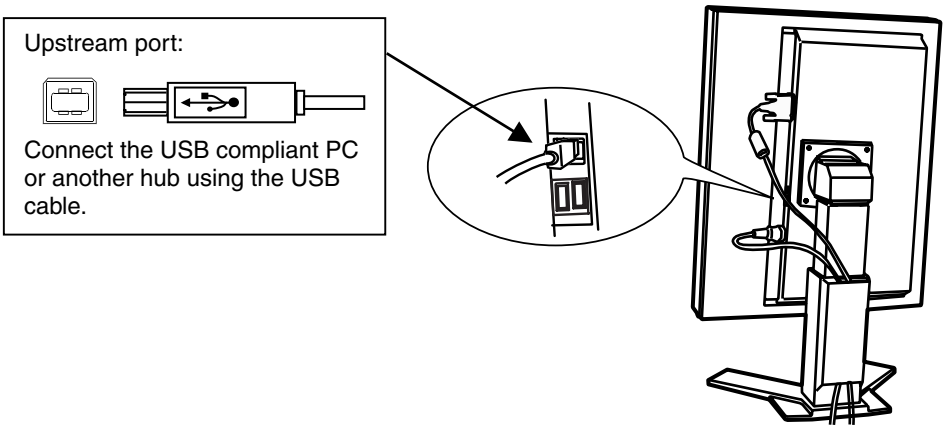

3. **After setting up, the monitor's USB hub is available for connecting USB compliant peripherals to the downstream ports of the monitor.**

Connecting Examples

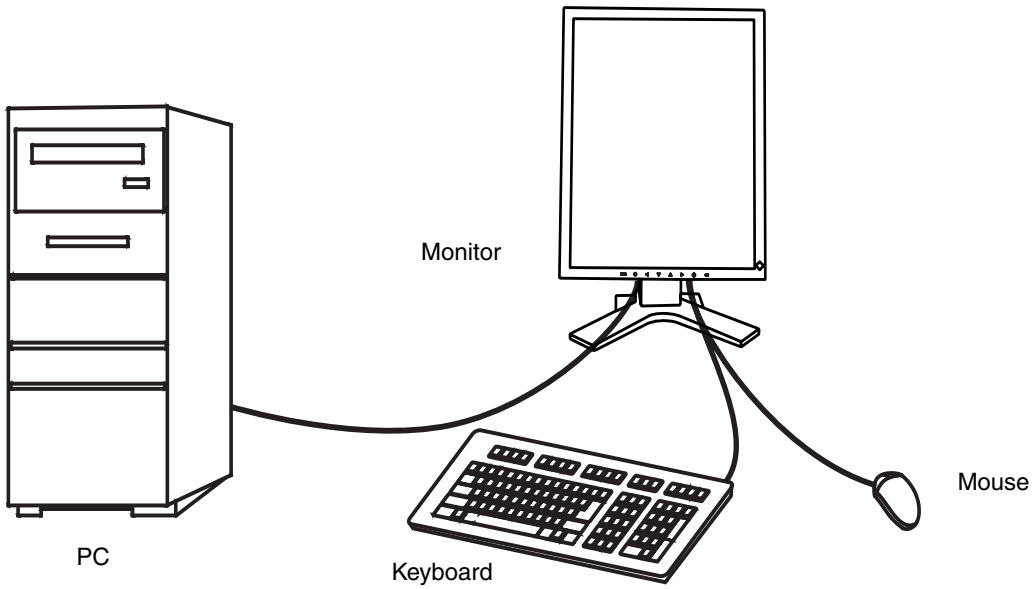

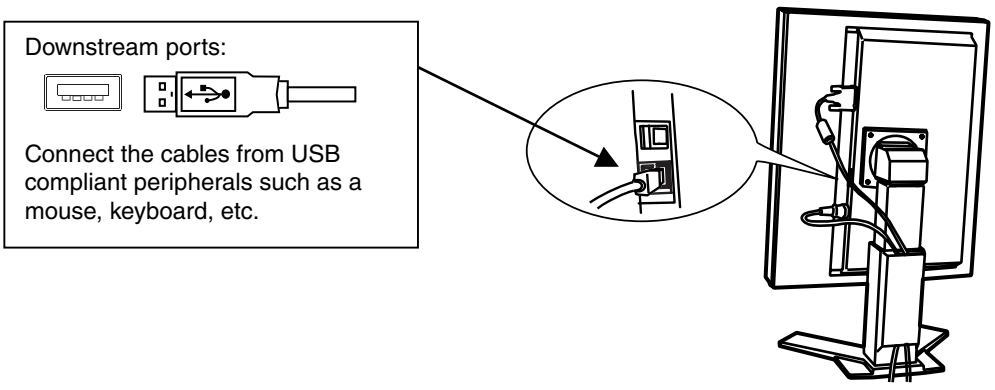

ScreenManager Pro for Medical (for Windows)

For further details about the “ScreenManager Pro for Medical (for Windows)”, refer to the EIZO LCD Utility Disk.

6. HOW TO ATTACH THE OPTIONAL ARM

An optional arm (or an optional stand) can be attached by removing the stand section. Please refer to our web site for the corresponding optional arm (or optional stand).
http://www.eizo.com

NOTE

- When attaching an arm or stand, follow the instructions of their user's manual.
- When using another manufacturer’s arm or stand, confirm the following in advance and select one conforming to the VESA standard.
  - Clearance between the screw holes: 100 mm × 100 mm
  - Thickness of plate: 2.6 mm
  - Strong enough to support weight of the monitor unit (except the stand) and attachments such as cables.
- When using an arm or stand, attach it to meet the following tilt angles of the monitor.
  - Up 45 degrees, down 45 degrees (horizontal display, and vertical display rotated 90 degrees counter-clockwise)
- Connect the cables after attaching an arm or a stand
- Do not adjust the height of the stand removed from the monitor. When adjusted without attached monitor, it causes the personnel injury or the damaged to the stand.
- Since the monitor and arm or stand are so heavy, dropping them may result in injury or equipment damage.

Setup Procedure

1. **Lay the LCD monitor on a soft cloth spread over on a stable surface with the panel surface facing down.**

2. **Remove the stand. (Prepare a screwdriver)**
Unscrew the four screws securing the unit and the stand with the screwdriver.

3. **Attach the monitor to the arm or stand.**
Secure the monitor to the arm or stand using the screws specified in the user's manual of the arm or stand.

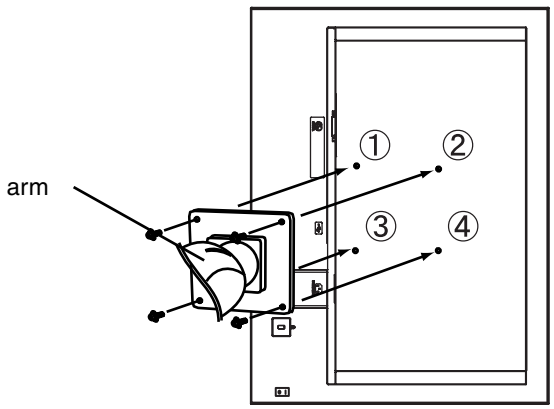

7. TROUBLESHOOTING

If a problem persists even after applying the remedies suggested below, contact an EIZO dealer.

- No picture problems → See No.1 ~ No.2
- Imaging problems → See No.3 ~ No.6
- Other problems → See No.7 ~ No.9
- USB problems → See No.10 ~ No.11

Problem	Points to check and possible solutions
1. No picture • Indicator status: Off	☐ Check that the power cord is connected correctly. If the problem persists, turn off the monitor power for a few minutes, then turn it back on and try again.
• Indicator status: Orange	☐ Try pressing a key on the keyboard or clicking the mouse (p. 20). ☐ Try turning the PC on.
• Indicator status: Flashing orange slowly	☐ Try touching the power switch to turn it on again (p. 21).
• Indicator status: Flashing orange quickly	☐ Try touching the power switch to turn it on again. ☐ If the power switch turns off again (indicator status: flashing orange quickly) within one minute of turning on, refer to Problem No. 9 on p. 29.
2. One of the error messages shown below remains on the screen for 40 second. • The message appears when the signal is not input. 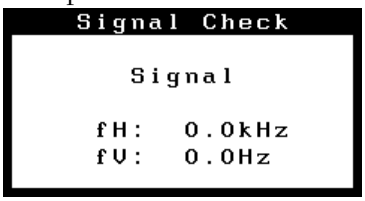	These messages appear when the video signal is not input correctly, even if the monitor functions properly. ☐ The message might appear because some PCs do not output the video signal immediately after powering on. If the image is displayed correctly after a short time, there is no problem with the monitor. ☐ Check that the PC is turned on. ☐ Check that the signal cable is properly connected to the PC or graphics board.
• The message appears when the signal is out of input range. (Example) 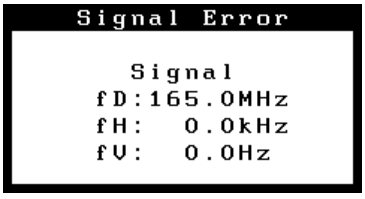	☐ Use the graphics board's utility software to change the frequency setting. (Refer to the manual of the graphics board.)

Problem	Points to check and possible solutions
3. The screen is too bright or too dark.	☐ Adjust the <Brightness> (The backlight of the LCD monitor has a fixed life span. When the screen becomes dark or begins to flicker, please contact your dealer.)
4. Afterimages appear.	☐ Do you use the screen saver or off timer (p. 21) when displaying the same image for extended periods of time? ☐ Afterimages are particular to LCD monitors. Avoid displaying the same image for extended periods of time.
5. The screen has defective pixels (e.g. appears slightly light or dark).	☐ This is due to the characteristics of the panel itself and not the LCD product.
6. Fingerprints remain on the screen.	☐ Leaving the screen white or black may solve the problem.
7. The ScreenManager main menu does not operate.	☐ Make sure that the adjustment lock is off (p. 23). ☐ Make sure the control panel switches are not wet or soiled. Lightly wipe the surface of the control panel, and try touching the switches again with dry hands. ☐ Make sure not to wear gloves. Remove any gloves, and try touching the switches again with dry hands.
8. The control panel does not operate. CAL Switch mode does not operate.	☐ Make sure the control panel switches are not wet or soiled. Lightly wipe the surface of the control panel, and try touching the switches again with dry hands. ☐ Make sure not to wear gloves. Remove any gloves, and try touching the switches again with dry hands.
9. The monitor turns off while in use and no picture appears on the screen.	The monitor automatically turns off when the internal temperature becomes excessive. If the temperature remains too high the monitor will turn off again within one minute, even after the power switch has been touched again. ☐ Move the installation location or change the installation environment and turn power on again after a few minutes. • Make sure the air vents are not blocked. • Make sure high temperature equipment is not located nearby. ☐ Contact an EIZO dealer when the power switch fails to restart the monitor even after its location is moved. NOTE Do not block the ventilation slots on the cabinet and do not install the monitor in a closed space.

Problem	Points to check and possible solutions
10. The USB function does not operate.	☐ Check that the USB cable is connected correctly. ☐ Check that the PC and OS are USB compliant. (For verification of USB support, consult the manufacturer of each system.) ☐ Check the USB setting in the PC's BIOS. (For details, refer to the manual of the PC.)
11. The PC freezes. The peripherals connected to the USB downstream ports do not operate.	☐ Check that the USB cable is connected correctly. ☐ Try connecting the peripheral to another USB downstream port. If the problem is solved by doing this, contact an EIZO dealer. (For details, refer to the manual of the PC.) ☐ Try executing the following method. - Restarting the PC - Connecting the PC and peripherals directly If the problem is solved by doing this, contact an EIZO dealer. ☐ The power switch on an Apple keyboard will not operate when connected to a USB downstream port on the monitor. Connect the keyboard directly to the Apple PC. (For details, refer to the Apple PC user's manual.)

8. CLEANING

Periodic cleaning is recommended to keep the monitor looking new and to prolong its operation lifetime.

NOTE

- Chemicals such as alcohol and antiseptic solution may cause gloss variation, tarnishing, and fading of the cabinet or panel, and also quality deterioration of the image.
- Never use any thinner, benzene, wax, and abrasive cleaner, which may damage the cabinet or panel.
- The optional ScreenCleaner is recommended for cleaning the cabinet and panel surface ("ScreenCleaner" is suuplied with GX320-CL/GS320-CLG)

If necessary, the stains on the cabinet and panel surface can be removed by moistening part of a soft cloth with water.

9. SPECIFICATIONS

LCD Panel	Size	54 cm (21.3 inch), TFT Monochrome LCD panel
	Response Time	34ms
	Surface treatment (GX320-CL/GS320-CL)	Anti-Glare, Hard Coating
	Surface treatment (GS320-CLG)	Hard Coating
	Surface hardness	2H
Panel Protector (GX320-CL)	Surface treatment	Anti-Reflection
	Surface hardness	2H or higher
	Visible reflectance	1.5% or less
	Visible light transmittance	96% or more
Viewing Angle		Horizontal: 170°, Vertical: 170° (CR≥10)
Dot Pitch		0.2115 mm
Horizontal Scan Frequency		31 ~ 100 kHz
Vertical Scan Frequency		29.5 ~ 71.5 Hz (VGA TEXT: 69 ~ 71 Hz)
Resolution		3M pixels (Portrait: 1536 × 2048 dots (H × V))
Dot Clock (Max.)		165 MHz
Gray Scale		1024 steps of 8161 steps (10bit monochrome signal input)
Recommended Brightness		450 cd/m^2 (approx.30%)
Display Area		433.1 mm (H) × 324.8 mm (V) (17.1" (H) × 12.8" (V))
Power Supply		100-120/200-240 VAC±10%, 50/60 Hz, 1.1-0.9A /0.6-0.45A
Power Consumption		Min.: 105 W Max.: 115 W (With USB) Power Saving Mode: Less than 3 W (for single signal input without USB)
Input Connector		DVI-D x 1
Input Signal		TMDS (Single Link)
Plug & Play		VESA DDC 2B / EDID structure 1.3
Environment Conditions	Temperature	Operating: 0 °C ~ 35 °C (32 °F ~ 95 °F) Transportation/Storage: - 20 °C ~ 55 °C (- 4 °F ~ 131 °F)
	Humidity	Operating: 30 % to 80 % R.H. Non-condensing Transportation/Storage: 30 % to 70 % R.H. Non-condensing
	Pressure	Operating: 700 to 1,060 hPa Transportation/Storage: 200 to 1,060 hPa
USB	Standard	USB Specification Revision 2.0
	USB ports	Upstream port × 1, Downstream port × 2
	Communication Speed	480 Mbps (high), 12 Mbps (full), 1.5 Mbps (low)
	Power Supply	Downstream: 500 mA for each (Max.)

Classification of Equipment		Type of protection against electric shock: Class I EMC class: EN60601-1-2:2007 Group 1 Class B Classification of medical device (MDD 93/42/EEC): Class I Mode of operation : Continuous IP Class : IPX0
GX320-CL		
Dimensions	With stand	376 mm (W) x 522.5 mm ~ 604.5 mm (H) x 208.5 mm (D) (14.8”(W) x 20.6” ~ 23.8” (H) x 8.2”(D))
	Without stand	376 mm (W) x 500 mm (H) x 94 mm (D) (14.8”(W) x 19.7”(H) x 3.7”(D))
Weight	With stand	10.8 kg (23.8 lbs.)
	Without stand	7.8 kg (17.2 lbs.)
GS320-CL/GS320-CLG		
Dimensions	With stand	376 mm (W) x 522.5 mm ~ 604.5 mm (H) x 208.5 mm (D) (14.8”(W) x 20.6” ~ 23.8” (H) x 8.2”(D))
	Without stand	376 mm (W) x 500 mm (H) x 92 mm (D) (14.8”(W) x 19.7”(H) x 3.62”(D))
Weight	With stand	9.9 kg (21.8 lbs.)
	Without stand	6.9 kg (15.2 lbs.)

Dimensions

mm (inches)

GX320-CL

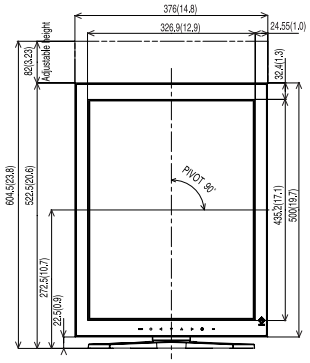

Front

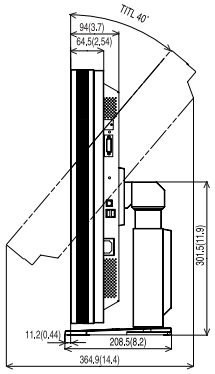

Side

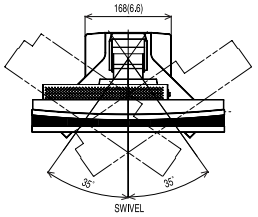

Top

GS320-CL/GS320-CLG

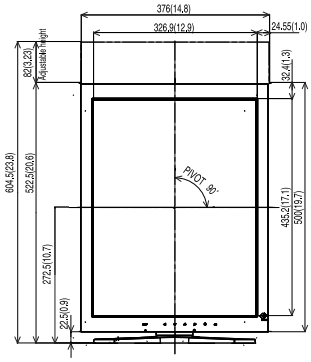

Front

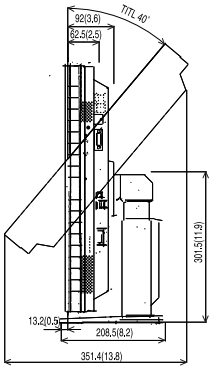

Side

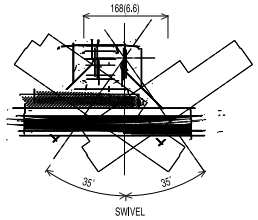

Top

Default Settings

CAL Switch Mode		1-DICOM
Brightness		Fixed at the factory
PowerManager		DVI DMPM
Off Timer		Disable
Menu Settings	Menu Position	Center
	Menu Off Timer	45 sec
Language		English
Signal Selection*		Standard
Orientation*		Portrait (HW)

*These functions cannot be initialized with a reset function (p.18). For information about setting these functions, refer to p. 15.

Optional

Calibration Kit	EIZO “RadiCS UX1 ”Ver.2.5.0 or later
Network QC Management Software	EIZO “RadiNET Pro” Ver.2.5.0 or later
Cleaning kit	EIZO “ScreenCleaner”

For the latest information about the accessories and information about the latest compatible graphics board, refer to our web site.

http://www.eizo.com

Pin Assignment

DVI-D Connector

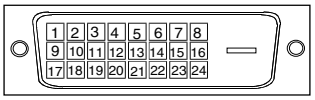

Pin No.	Signal	Pin No.	Signal	Pin No.	Signal
1	TMDS Data2-	9	TMDS Data1-	17	TMDS Data0-
2	TMDS Data2+	10	TMDS Data1+	18	TMDS Data0+
3	TMDS Data2/4 Shield	11	TMDS Data1/3 Shield	19	TMDS Data0/5 Shield
4	NC*	12	NC*	20	NC*
5	NC*	13	NC*	21	NC*
6	DDC Clock (SCL)	14	+5V Power	22	TMDS Clock shield
7	DDC Data (SDA)	15	Ground (For +5V)	23	TMDS Clock+
8	Analog Vertical Sync	16	Hot Plug Detect	24	TMDS Clock-

(*NC: No Connection)

USB Port

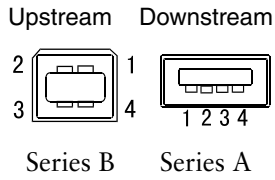

No.	Signal	Remarks
1	VCC	Cable power
2	- Data	Serial data
3	+ Data	Serial data
4	Ground	Cable Ground

10. GLOSSARY

DICOM

(Digital Imaging and Communication in Medicine)

The DICOM standard was developed by the American College of Radiology and the National Electrical Manufacturer's Association of the USA.

A DICOM-compatible device connection enables the transfer of medical images and information. Part 14 of DICOM defines the standards for digital, grayscale medical image display.

DVI

(Digital Visual Interface)

A digital flat panel interface. DVI can transmit digital data without loss and directly from the PC using the signal transition method "TMDS" (see p. 36).

There are two kinds of DVI connectors: the DVI-D connector for digital signal input only, and the DVI-I connector for both digital and analog signal inputs.

DVI DMPM

(DVI Digital Monitor Power Management)

The Power management system for the digital interface. The "Monitor ON" status (operation mode) and the "Active Off" status (power-saving mode) are indispensable for the DVI-DMPM as the monitor's power mode.

Resolution

The LCD panel consists of numerous pixels of specified size, which are illuminated to form images. The display panel of this monitor consists of 1536 horizontal pixels and 2048 vertical pixels. At a resolution of 1536 x 2048, images are displayed as a full screen (1:1).

TMDS

(Transition Minimized Differential Signaling)

A signal transition method for the digital interface.

Recycling Information for customers in EU:

All recycling information is placed in the following websites.

Recycling-Information für Kunden in Europa:
Alle Informationen zum Thema Recycling finden Sie auf den folgenden Websites:

Informations sur le recyclage pour les clients dans l'UE:
Vous trouverez toutes les informations sur le recyclage dans les sites Web suivants:

Återvinningsinformation för kunder i EU:
All information om återvinning finns på följande webbsidor:

http://www.swico.ch/

http://www.eizo.de/

http://www.eizo.se/

Recycling Information for customers in USA:
All recycling information is placed in the Eizo Nanao Technologies, Inc.'s website.

http://www.eizo.com/

EIZO NANAO CORPORATION
153 Shimokashiwano, Hakusan, Ishikawa 924-8566 Japan
Phone: +81 76 277 6792 Fax: +81 76 277 6793

EIZO GmbH
Siemensallee 84, 76187 Karlsruhe, Germany
Phone: +49 721 20321 0 Fax: +49 721 20321 471

艺卓显像技术(苏州)有限公司
中国苏州市苏州工业园区展业路8号中新科技工业坊5B
Phone: +86 512 6252 0100 Fax: +86 512 6252 1508

株式会社ナナオ
〒924-8566 石川県白山市下柏野町 153 番地

http://www.eizo.com
http://www.eizo.co.jp

7th Edition-March, 2012 Printed in Japan.
00N0L233G1
(U.M-GS320-AL)

Copyright © 2006-2012 EIZO NANAO CORPORATION All rights reserved.